NACHI

Use NACHI hydraulics to save energy

Just replace your conventional hydraulic unit to our 'NSP*i*' series inverter-driven hydraulic units

Reduce power consumption with 69%

www.sritong.co.th Sritong Engineering

New Series

Energy-saving variable pump unit

NSP*i* Series Inverter-driven Hydraulic Unit

Inverters save energy with hydraulics.

IE3 Conform to Premium Efficiency

Energy savings

Reduce Electrocity Consumption with approximately 69%

(compared to our standard unit while dwelling)

NSP, base unit for NSP*i*, already achieved less electrocity power consumption in 46% with new induction motor conformed to IE3 In addition, **inverter drive** brings us additional power consumption saving with 64% comparing with our standard conventional unit.

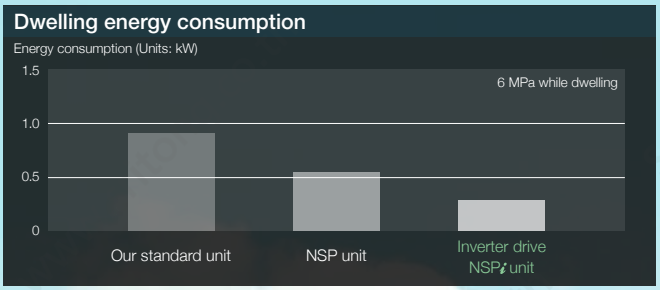

Energy costs reduced 40%

(compared to systems operating existing equipment (our estimates))

Compared to our standard unit, the NSP unit cuts about 25% and the **inverter drive** NSP*i* unit cuts another 40% from energy bills.

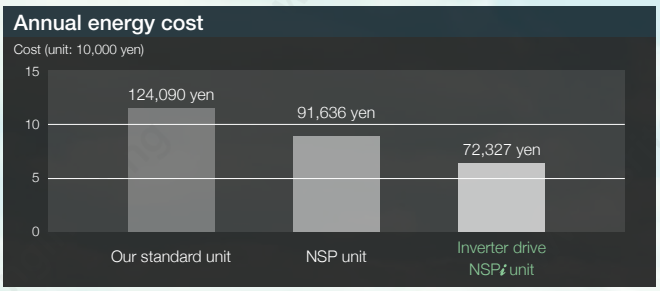

Reduces annual CO_2 emissions by two tons

The **inverter drive** NSP*i* unit emits about 42% less CO_2 than our standard unit.

Equivalent to two hectares of forest

Method for calculating energy costs and CO_2 emissions

Yearly operating time	8000 hours	Energy unit cost	15 yen/kWh
Dwelling	17 hours/day	CO_2 emissions factor	0.555 kgCO_2/kWh
Discharging	5 hours/day		

* CO_2 emissions factor: Default value set by Ministry of Economy Trade and Industry & Ministry of the Environment Ordinance Number 3, 2006.

Compact

Same size even with inverter drive

If you are using an NSP unit now, you can replace it without redesigning your machinery because it is almost the same size as the NSP unit. Replacing to an **inverter drive** NSP*i* unit means even greater energy savings.

Replacement without machine modification is possible

10 L (tank)

20 L (tank)

Built-in inverter

Added Inverter Drive to Compact Body. Even More Environmentally Friendly and Quiet.

Decrease the oil temperature rise

1.5°C increase in ambient temperature

The NSP*i* series benefits your entire system by lowering oil temperature to improve machining accuracy, lengthen the life of seals and hydraulic fluid, and reduce factory air conditioning costs.

Improve machining accuracy

Longer life on seals and fluid oil

Reduce maintenance cost

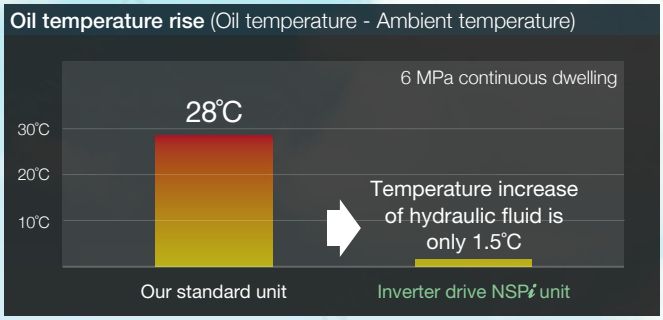

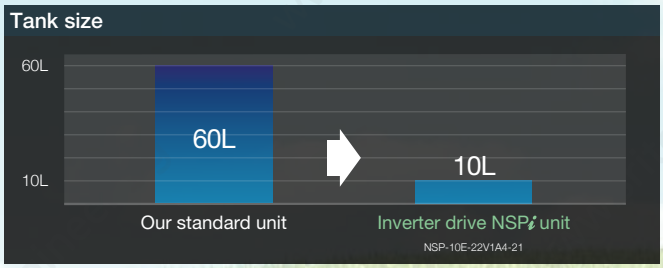

Greatly reduce the volume of hydraulic fluid

Low noise

Remarkable 53 dB (A)

The noise on holding is as quiet as a relaxing coffee shop. The **inverter drive** realizes energy saving and comfortability at the same time.

(6 MPa while dwelling NSP-10E-22V1A4-21)

Easy Operation and Reliable Performance

Immediate start just by turning on the power

The **inverter drive** NSP*i* unit can be started easily just by turning on the power.
Just push a single button to operate at maximum energy savings after pressure is adjusted.

Production lines keep running

Production lines continue running even if there is trouble with the inverter because it is based on our reliable NSP unit and keeps running as a regular NSP unit.

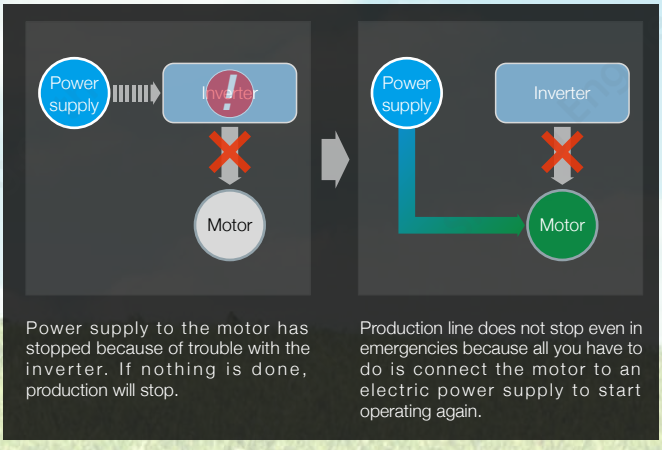

- Be careful of increases in hydraulic fluid temperature in the tank when not doing inverter energy savings operation.
- In case of direct connection to electric motor, check the range of rated voltage (200V 50HZ/60HZ, 220V 60HZ).

Specifications

Power supply	200V : 3ϕ AC200～240V, 50/60Hz 400V : 3ϕ AC380～480V, 50/60Hz
Rated input current	200V : 9.7A/1.5kW, 13.4A/2.2kW 400V : 5.9A/1.5kW, 8.2A/2.2kW Not including the inlet current for fan cooler.
Pressure range	A2: 1.5～4.0MPa A3: 3.5～6.0MPa A4: 5.5～8.0MPa
Output flow (at no load)	0A※: 14L/min 1A※: 28L/min
Hydraulic fluid	Standard mineral-based hydraulic fluid (equivalent to ISO VG 32)
Hydraulic fluid temperature	Use at temperatures below 60˚C.
Color of paint	Munsell No. N1 (semigloss), JPMA No. AN-10 equivalent
Ambient temperature/ humidity	0 to 35˚C/20 to 85% RH (no condensation) (Keep the unit away from water-soluble cutting fluid mist.)

Note: Enter "X1" in the optional code section if AC230V is used as the power source.
Then, AC230V type fan cooler is applied.

Installation dimensions

Model	Motor (kW-P)	Size											Estimated weight (kg)
		LA	LB	LC	LD	LE	LF	LG	LH	LI	H	L	
NSP-10E-15V※A※-21	1.5-4	510	5	501	265	236	164	119	172	30	10L	8.5L	46
NSP-10E-22V1A※-21	2.2-4	540	35	521		256	174	129					51
NSP-20E-15V1A※-21	1.5-4	510	5	601	365	236	164	119	252	50	20L	16L	49
NSP-20E-22V1A※-21	2.2-4	540	35	621		256	174	129					54

• Weight estimate does not include hydraulic fluid

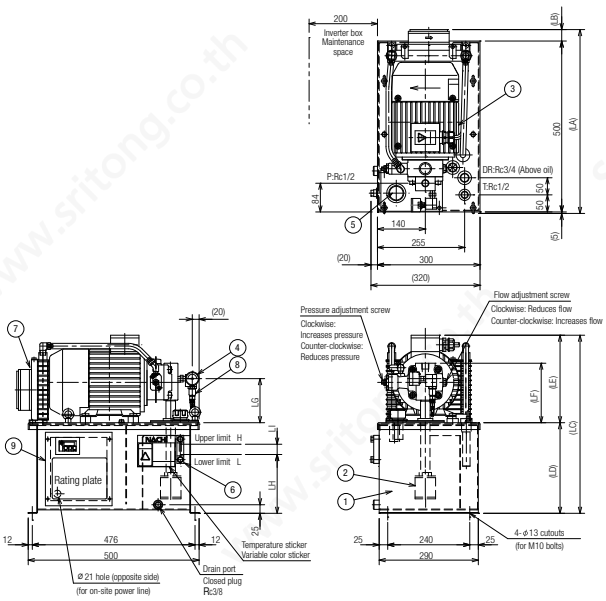

Explanation of model numbers

NSP-※※E-※※※V※A※-※-21

- Design No.
- Options G : Fluid level gauge guard
  H : Temperature switch (NOTE1)
  J : Resin tank (10L only)
  M : Magnet separator (NOTE2)
  S : Float switch (NOTE1) (NOTE2)
  T : Temperature gauge (with fluid level gauge)
  X1 : Fan cooler=1ϕAC 230V-50/60Hz (NOTE3)

NOTE1) Both S and H cannot be installed.
NOTE2) Never equip M and S at the same time.
NOTE3) In case of Option "X1", wiring for fan cooler is required separately.
Please contact us in case of another application on voltage particularly.

- Pressure range: A2: 1.5～4.0MPa / A3: 3.5～6.0MPa / A4: 5.5～8.0MPa
- Output flow (at no load): 0: 14L/min (1.5kW only) / 1: 28L/min
- Motor power supply: No sign: 200V / 4: 400V
- Electric motor capacity: 15: 1.5kW / 22: 2.2kW
- E: Inverter drive
- Tank size: 10: 10L / 20: 20L

Hydraulic circuit

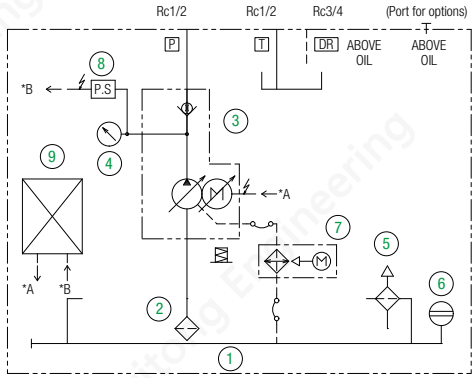

1	Oil tank	6	Hydraulic fluid level gauge
2	Suction strainer	7	Cooling fan
3	Uni-pump	8	Pressure sensor
4	Pressure gauge	9	Inverter control box
5	Hydraulic fluid inlet & air breather		

Precautions

- Turning the inverter on and off by cutting the main power supply (circuit breaker) significantly reduces the life of the inverter and should be limited to once an hour or less. Contact us if you need to start and stop operations frequently.
- On changing the parameter for inverter, never use the parameters except shown in the instruction manual. Otherwise it may not work normally.
- Use a 1/2 inch diameter two meter long flexible hose rated for maximum 14 MPa to connect the hydraulic unit's P port (discharge port) and the external manifold (or actuator).
- Maximum peak pressure (set pressure + surge pressure) must be within 14 MPa. Install a relief valve on the hydraulic circuit side to cut surges if peak pressure is higher than 14 MPa.
- Volume of leakage on external hydraulic circuits must be less than 1 L/min. Consult us if leakage on external hydraulic circuit is greater than 1 L/min.
- Volume of hydraulic fluid in the tank must stay within the range visible on the fluid level gage (10L:approximately 1.5 L , 20L:approximately 4L).

NACHI

NACHI-FUJIKOSHI CORP.

www.nachi.com

Toyama Head Office	Tel: 076-423-5111	
Tokyo Head Office	Tel: 03-5568-5246	
NACHI AMERICA INC. HEAD QUARTERS	Tel: +1-317-530-1001	http://www.nachiamerica.com/
NACHI EUROPE GmbH	Tel: +49-(0)2151-65046-0	http://www.nachi.de/
NACHI TECHNOLOGY (THAILAND) CO., LTD.	Tel: +66-2-714-0008	http://www.nachi.co.th/
NACHI SINGAPORE PTE. LTD.	Tel: +65-65587393	
NACHI (SHANGHAI) CO., LTD.	Tel: +86-(0)21-6915-2200	http://www.nachi.com.cn/
FUJIKOSHI-NACHI (MALAYSIA) SDN. BHD.	Tel: +60-(0)3-80247900	
NACHI (AUSTRALIA) PTY. LTD.	Tel: +61-(0)2-9898-1511	http://www.nachi.com.au/

●Specifications and configurations may change due to product developments without prior notice.

CATALOG NO. H9241E-4

2016.12.X-MIZUNO